# Germany - SCHUKO Socket Outlets, Snap-In Mounting

## SCHUKO Socket Outlets, Snap-In Mounting, 2-pole + Ground, 16A 250V, acc. to DIN 49440

*SCHUKO-Einbausteckdosen, Einschnappmontage, 2-polig + Erde, 16A 250V, nach DIN 49440*

1101010

## SPECIFICATIONS

- **Electrical Ratings:**
  **250V AC, 16A**
- **Standards according to:**
  **DIN 49440**
- **Material:**
  **Thermoplastic**
- **Mounting:**
  **Quick mounting with steel springs**
  **For material widths of 1 - 3.5 mm**

| Catalog No. | Color | Description | VPE / Packed | EDP-Nr. |
|---|---|---|---|---|
| **1101000** | Black | Snap-In Socket Outlet, 16 Amp, 250V AC, DIN 49 440 | 100 ea | **115404** |
| **1101010** | White | Snap-In Socket Outlet, 16 Amp, 250V AC, DIN 49 440 | 100 ea | **115405** |

For material widths of 1 - 3.5 mm

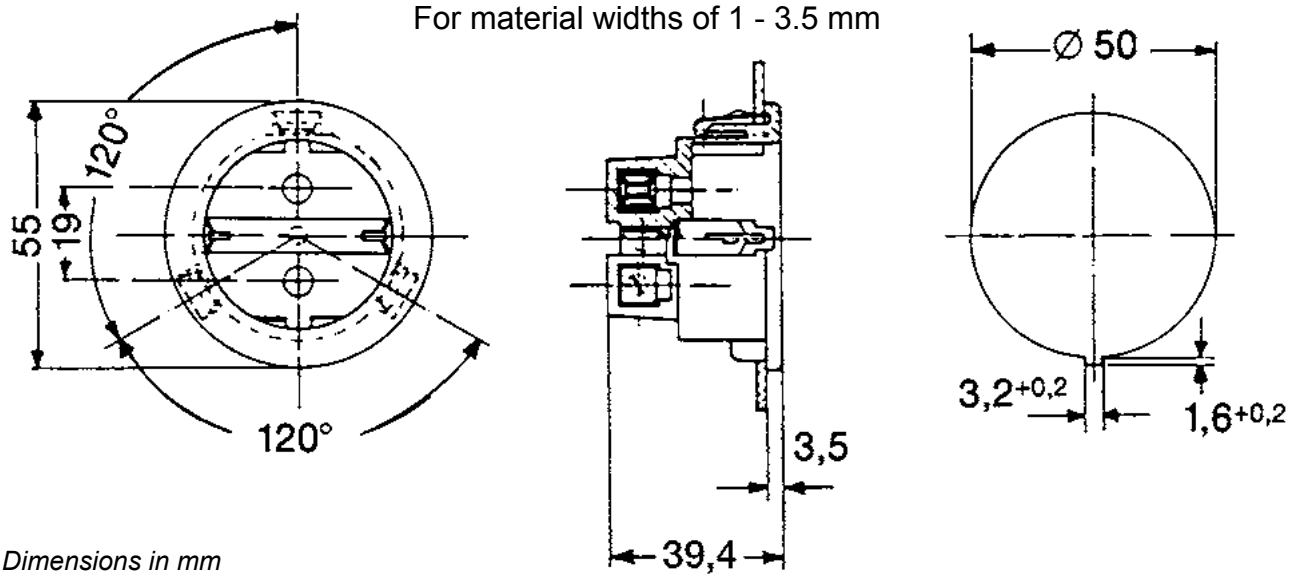


*Dimensions in mm*